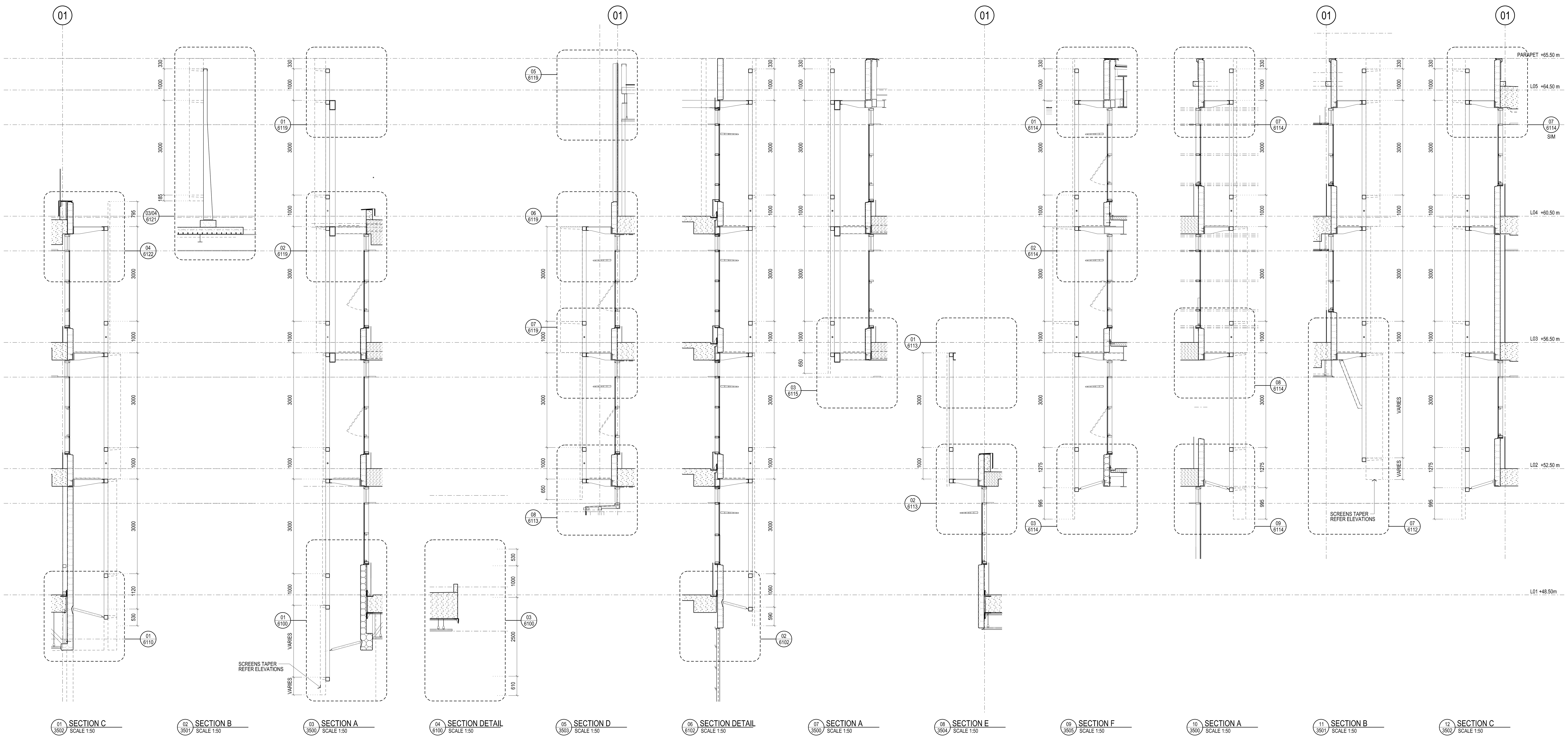

THIS DRAWING IS AN UNCONTROLLED COPY UNLESS STAMPED OTHERWISE

CONTRACTORS SHALL VERIFY JOB DIMENSIONS BEFORE ANY JOB COMMENCES. ALL SHOP DRAWINGS SHALL BE SUBMITTED TO THE SUPERINTENDENT AND MANUFACTURE SHALL NOT COMMENCE PRIOR TO THE RETURN OF UNAMENDED SHOP DRAWINGS SIGNED BY THE CONSULTANT. FIGURED DIMENSIONS SHALL TAKE PRECEDENCE OVER SCALED. THIS DRAWING SHOULD BE READ IN CONJUNCTION WITH ALL RELEVANT CONTRACT, SPECIFICATIONS AND DRAWINGS COPYRIGHT OF THIS DRAWING IS VESTED IN WARDLE

General Notes

REFER ARCHITECTURAL DRAWINGS:

FACADE SETOUT AR1502-AR1507
PRECAST SETOUT AR1512-AR1517
SCREEN SETOUT AR1552-AR1557
SCREEN DETAILS AR6550-AR6554

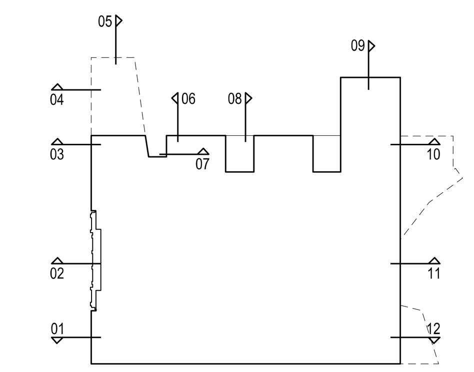

KEY PLAN

Rev	Issue	Revision Description	Amd	Date
A	SG	ISSUED FOR CONSTRUCTION	-	10.01.14
02	SG	VALUE MANAGEMENT ISSUE	-	28.03.13
01	SG	100% CD - TENDER ISSUE	-	07.09.12

Brookfield MULTIPLEX

NADAAA

NADAAA
1920 Washington
Street No.2
Boston
Massachusetts
02118 USA

Telephone
+1 617 442 6232
Facsimile
+1 888 442 1417
Email
nada@nadaaa.com

John Wardle Architects

25 Rokeby Street, Collingwood, Victoria 3066 Australia
Tel : +61 3 8662 0400 www.johnwardlearchitects.com
© 2012 John Wardle Architects ABN 83 006 814 268

Client University of Melbourne
Parkville Campus

Project Faculty of Architecture
Building and Planning

Title FACADE SCREEN SECTIONS

Project No. 0913	Scale 1:50 @ A0 1:100 @ A2	
Drawing No. AR3554	Revision A	
Date Sept 2011	Drwn -	Co-Ord -	Chck -

FILENAME - $FILE$

FOR CONSTRUCTION